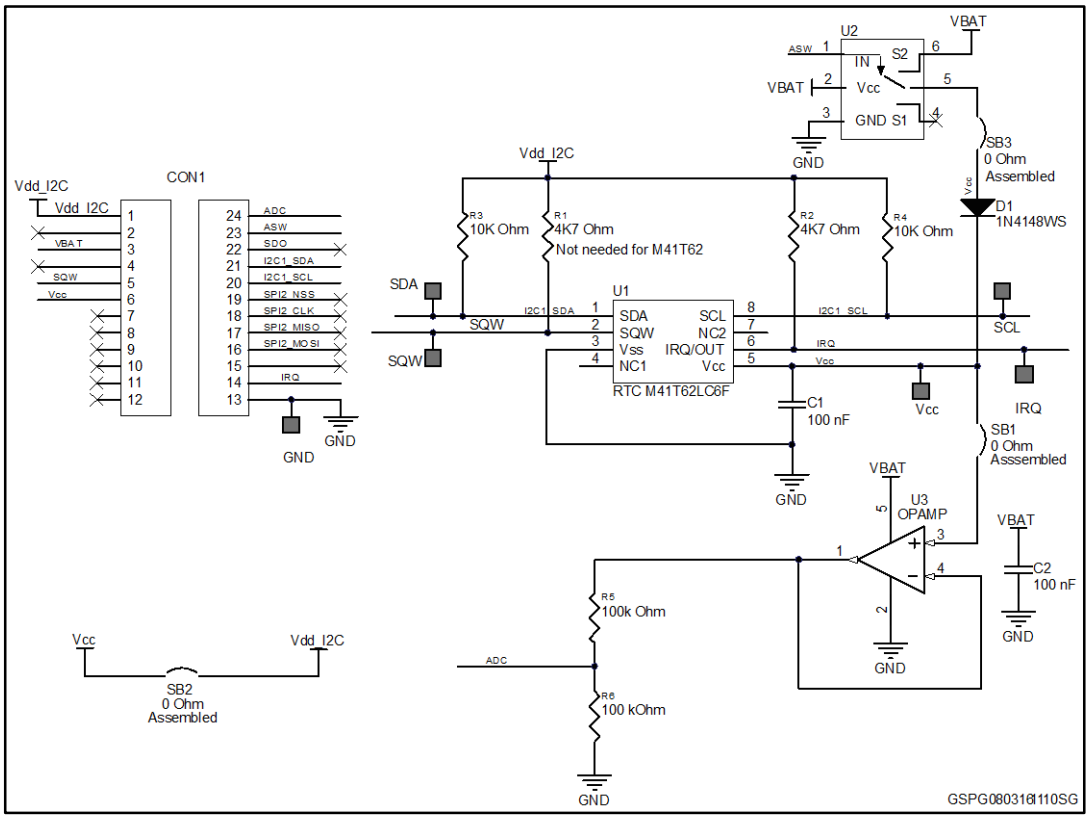STEVAL-FAT001V1 Schematic diagram